V.ORLANDI AUSTRALIA

DESIGNED AND DEVELOPED FOR AUSTRALIAN CONDITIONS

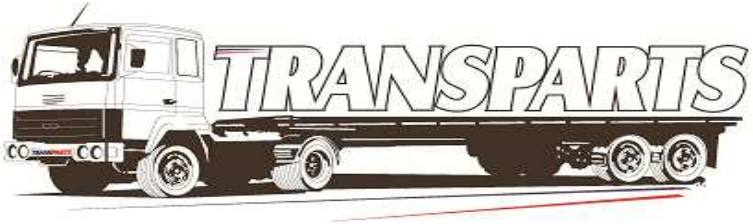

V.ORLANDI S.p.A.

MANUFACTURING TOWING SYSTEMS SINCE 1859

HISTORY
Born in Brescia (Italy) in 1859

FLEXIBILITY
Family owned business

CORE BUSINESS
Towing systems addressed to Automotive, Mining, Agricultural and Military players

COMPLETE RANGE OF PRODUCTS
Manufacturing products from 3,5 to 500 tons towing capacity

SERIAL NUMBER
Fully traceability on the products is guaranteed

WORLDWIDE VISION
Well established after-market sales network all around the world

STANDARDS
All products are homologated according to the most important worldwide standards

V.ORLANDI AUSTRALIA PTY LTD

MANUFACTURING TOWING SYSTEMS SINCE 1859

KNOWLEDGE AND EXPERIENCE IN THE TRANSPORT INDUSTRY

V.Orlandi is part of the below Industry Associations

ISO TC22/SC15/WG4 (International Standards)
Working group in charge of Regulations/ Standardisation of towing coupling system.
V.Orlandi Representative: Convenor

UNECE R55.01(World-wide product regulation)
Working group in charge of amendments of regulations R55.01
V.Orlandi Representative: Expert / Participant Member

NHVR – ARTSA (Australian Industry Associations)
Working group in charge of heavy vehicle couplings and safety chain.
V.Orlandi Representative: Expert / Participant Member

WORLDWIDE STANDARDS

MANUFACTURING TOWING SYSTEMS SINCE 1859

EUROPEAN UNION Standard
94/20/CE
-

NATO Standard
ECE R 55.01
-

Russian Certification
GOST
-

Australian Standard
CRN

Vehicle Standard (Australian Design Rule 62/02 – Mechanical Connections Between Vehicles) 2007

15. ALTERNATIVE STANDARDS

15.1. The technical requirements of ECE Regulation No. 55/01 Uniform Provisions Concerning the Approval of Mechanical Coupling Components of Combinations of Vehicles shall be deemed to be equivalent to the technical requirements of this standard as applicable to:

15.1.1. Class G50 standard 50 mm pin diameter fifth wheel couplings and class H fifth wheel coupling pins, 50 mm diameter;

15.1.2. Class G50-X non-standard 50 mm pin diameter fifth wheel couplings if the manufacturer can demonstrate that they can be reliably coupled to class H fifth wheel coupling pins, 50 mm diameter;

15.1.3. Class H50-X non-standard 50 mm pin diameter fifth wheel coupling pins if the manufacturer can demonstrate that they can be reliably coupled to class G50 standard 50 mm pin diameter fifth wheel couplings;

15.1.4. Class C drawbar couplings with a 50 mm diameter pin and class D drawbar eyes having a parallel hole suitable for a 50 mm diameter pin;

15.1.5. Class A50-1 to A 50-5 standard 50 mm coupling balls with flange type bolted fixing;

15.1.6. Class A50-X non-standard 50 mm coupling balls and brackets if the manufacturer can demonstrate that they can be reliably coupled to class B coupling heads fitted to the drawbar of trailers for connecting to the 50 mm diameter coupling ball;

SOURCE: Australian Design Rule 62/02 Mechanical Connections Between Vehicles PAGE 15, P. 15

TRACEABILITY SYSTEM

MANUFACTURING TOWING SYSTEMS SINCE 1859

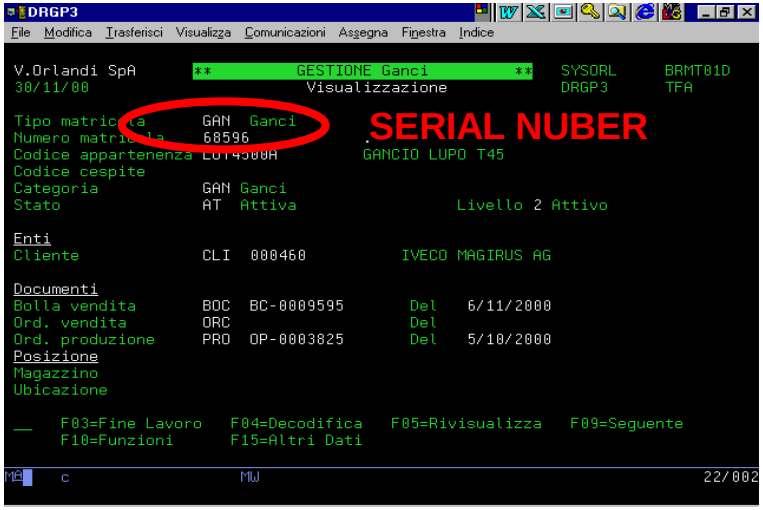

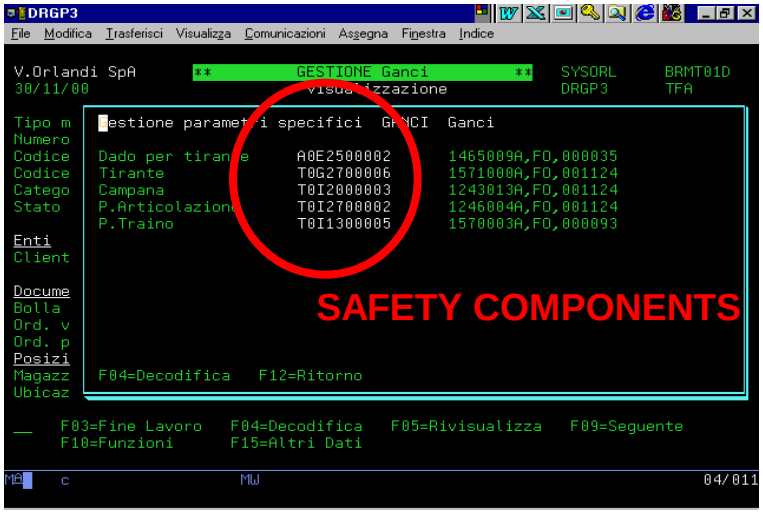

Characterises the product with high security level

-

Traces the history, the application or the location of a part or an activity through an identification register

-

Obtained by assigning an alphanumeric code **(<u>serial number</u>)** for every single product unit

-

Traceability files are organised in the operational system AS400

DEALER NETWORK

M ANUFACTURING TOWING SYSTEMS SINCE 1859

EUROPE

- The Netherlands
- Belgium
- Czech Republic
- France*
- Germany*
- Spain
- Ireland
- Italy*
- Poland*
- Romania
- Norway
- Finland
- Sweden
- Denmark
- Estonia
- Latvia
- Lithuania
- Austria
- Portugal
- UK

WORLDWIDE

- Cuba
- Uruguay
- Venezuela
- Chile
- Libya
- Algerie
- Egypt
- Sudan
- Ethiopia
- Kenya
- Russia
- Turkey
- Iran
- Israel
- U.A.E.
- South Africa
- Australia*
- New Zealand

V.ORLANDI AUSTRALIA PTY LTD

MANUFACTURING TOWING SYSTEMS SINCE 1859

PRODUCT RANGE

MANUFACTURING TOWING SYSTEMS SINCE 1859

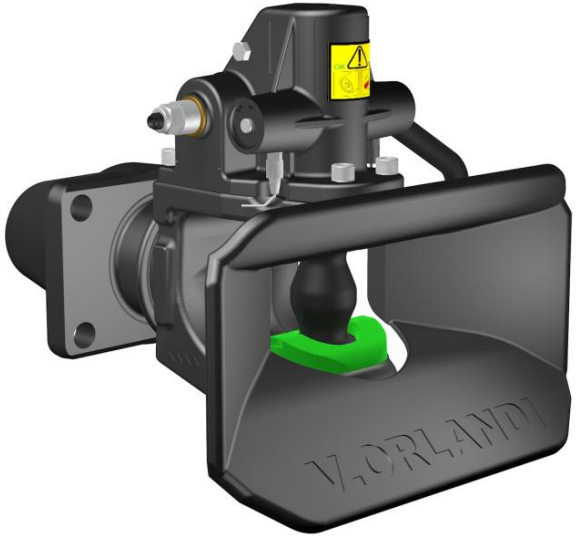

DRAWBAR COUPLINGS

How to identify a coupling application. What do I need to know?

1. Type of trailer (application)
2. Coupling articulation system
3. Coupling pin diameter
4. Hole pattern

THE TYPE OF TRAILER

MANUFACTURING TOWING SYSTEMS SINCE 1859

STEERING AXLE TRAILER

Horizontal forces

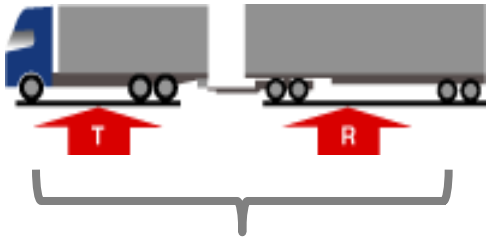

D-Value = kN

CENTRAL AXLE TRAILER

Vertical and horizontal forces

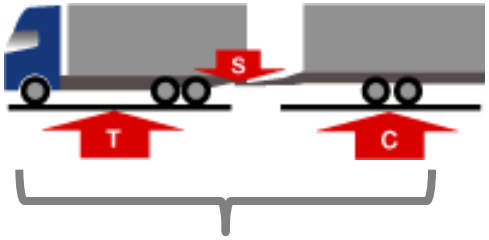

Dc-Value = kN

V-Value = kN

ROAD TRAIN CONFIGURATION

Horizontal forces

D-Value = kN

THE «D-VALUE»

MANUFACTURING TOWING SYSTEMS SINCE 1859

Theoretical load for the determination of the horizontal dynamic force between towing vehicle and steering axle trailer.

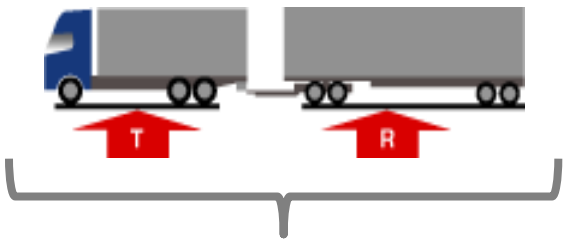

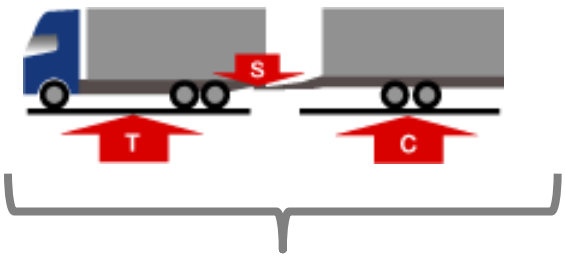

D-Value = g x (T x R) / T + R

Dc-Value = g x (T x C) / T + C

g = Gravitational acceleration; 9,81 m/s^2

T = Technically admissible max weight weight of towing vehicle in tons

R = Technically admissible max weight of trailers in tons

C = Max axle loads transmitted to the ground in tons

THE COUPLING ARTICULATION SYSTEMS

MANUFACTURING TOWING SYSTEMS SINCE 1859

RIGID

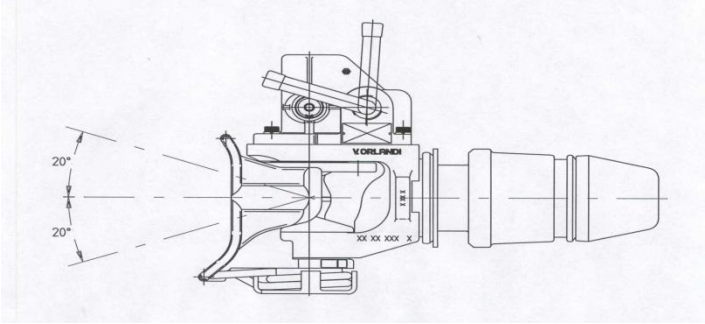

Movement to the trailer guaranteed by the shape of the coupling pin (barrel)

OSCILLATING

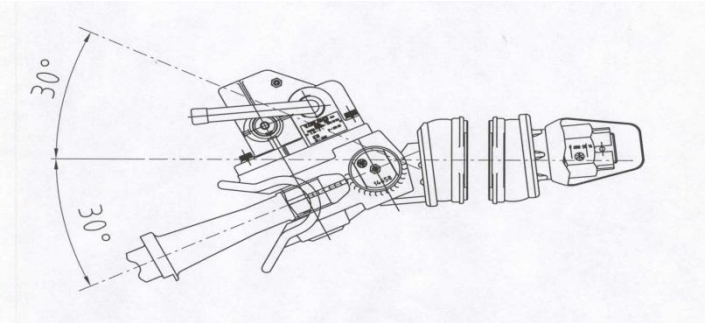

Movement to trailer guaranteed by the articulation of trailer coupling bell-mouth

PIN DIAMETER & HOLE PATTERN

MANUFACTURING TOWING SYSTEMS SINCE 1859

PIN DIAMETER

40mm DIN Standard (Germany)

-

45mm CUNA Standard (Italy)

-

50mm ISO Standard (worldwide)

-

50mm BNA Standard (France)

-

57mm SWEDISH Standard (Scandinavia)

-

70mm HD V.ORLANDI Standard

-

76mm NATO Standard

HOLE PATTERN

160x100 mm

Most used for heavy truck applications

-

140x80 mm

Most used for medium truck applications

-

120x55 mm

Most used for light truck applications

-

Dedicated hole patterns

COUPLING PRODUCT RANGE

MANUFACTURING TOWING SYSTEMS SINCE 1859

GM 10

Towing coupling
Private yard towing

DE 71

Mixed-hitch
Light vehicles

GA 25

25mm Automatic
Airport trolley trailers

GA 38

38mm Automatic
Light vehicles

E 40

40mm Automatic
Light & Medium vehicles

E 550 PACIFIC

50mm Automatic
Pig, Dog, Road Train

EH 524 PACIFIC

50mm Automatic
Tipping Over Axle Trailer

E 57 PACIFIC

57mm Automatic
Pig, Dog, Road Train

HERCULES PACIFIC

50mm & 70mm Manual
H.D. Mining

AUSTRALIAN KEY PRODUCT

MANUFACTURING TOWING SYSTEMS SINCE 1859

E 40

- 40mm Automatic drawbar coupling
- D-Value: 150 kN
- Weight: 37,5 Kg
- One automatic safety devices
- Easy to maintain (3D tutorial available)
- ECE R55.01 (Dotars approved)

EXTRA SAFETY: wide range of devices to improve the operator safety (Retrofit Kits)

OPEN/CLOSE IN-CABIN LIGHTS

ANTI JAKKNIFE KIT

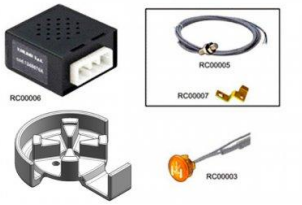

PNEUMATIC CO02200

E40 SPARE PARTS

POPULAR

MEDIUM

RARE

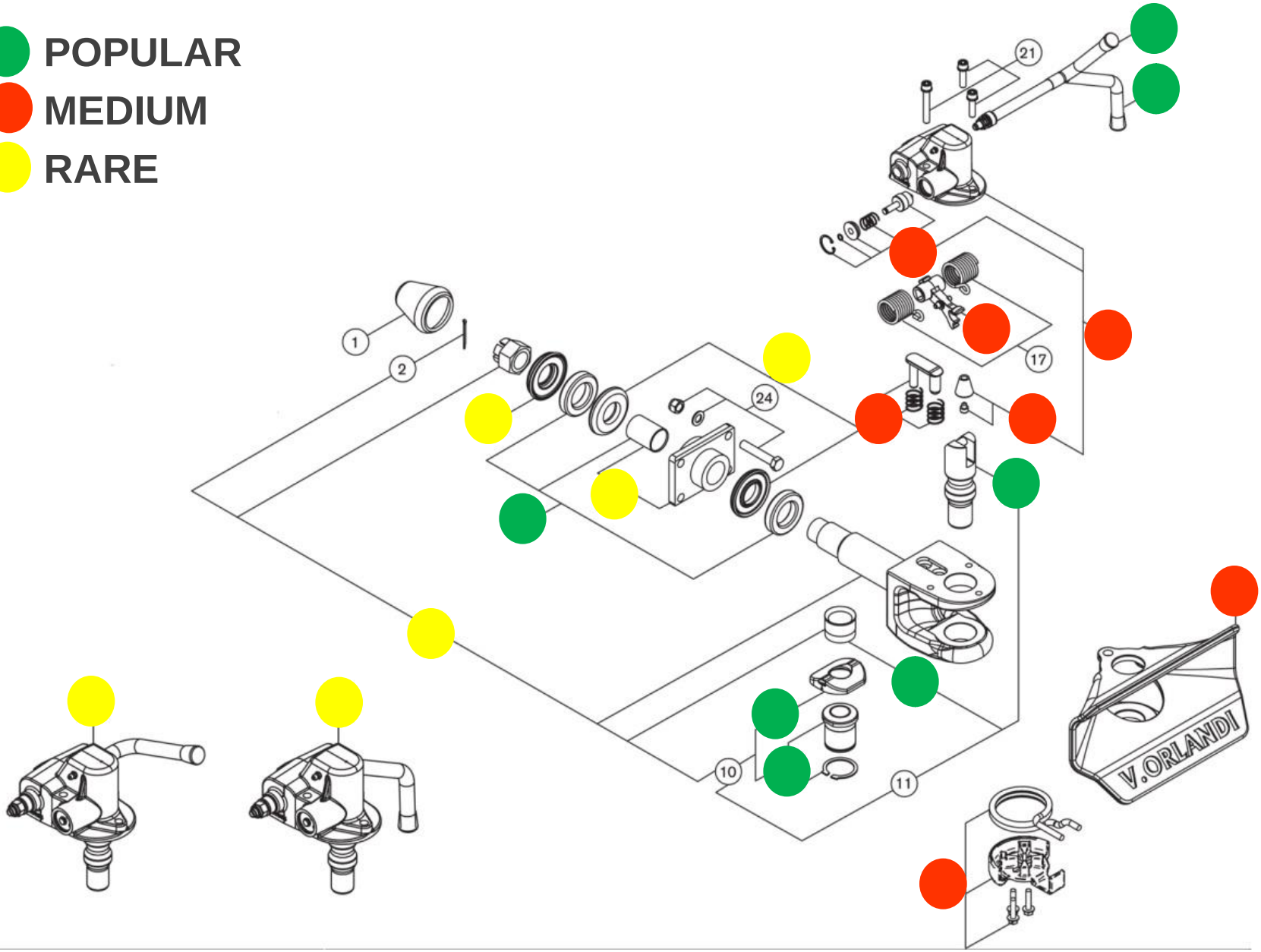

AUSTRALIAN KEY PRODUCT

MANUFACTURING TOWING SYSTEMS SINCE 1859

E 550 PACIFIC

- 50mm Automatic drawbar coupling
- D-Value: 330 kN
- Weight: 42 Kg
- Designed for Australian conditions
- In-cabin red-light sensor included
- Two automatic safety devices
- Easy to maintain (3D tutorial available)
- ECE R55.01 (Dotars approved)

EXTRA SAFETY: wide range of devices to improve the operator safety (Retrofit Kits)

MANUAL SAFETY DEVICE

ANTI JAKKNIFE KIT

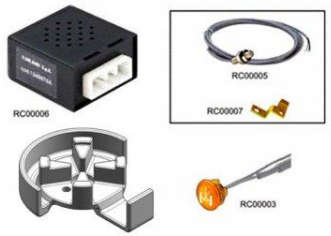

PNEUMATIC CO02200

PNEUMATIC NEW CO02200

PART NUMBERS

MANUFACTURING TOWING SYSTEMS SINCE 1859

PREFIX	+	ACTION LEVER TYPE		+	VERSIONS	+	WEARING PAD TYPE	
E550		A (upwards)	B (downwards)		0-1-3-9		M (Steel wear pad)	P (Plastic wear pad)

ACTION LEVER TYPE	VERSION 0	VERSION 1 CO01600	VERSION 3 CO01603	VERSION 9 CO02100
A/B 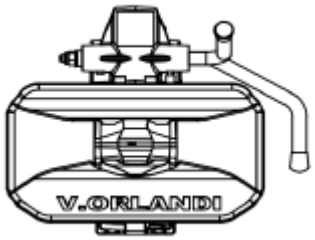		INCLUDING OPEN/CLOSE REMOTE INDICATOR + JACK KNIFE ALARM	INCLUDING RED LIGHT INDICATOR	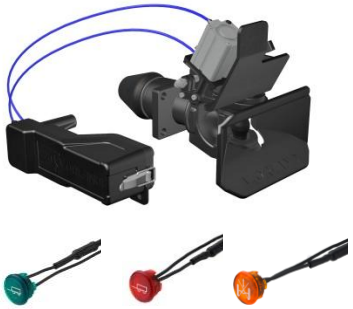 INCLUDING OPEN/CLOSE REMOTE INDICATOR + JACK KNIFE ALARM + PNEUMATIC OPENING SYSTEM

VERSION "0": to be sold in WA and NT – ROADTRAIN application without "Red Light Indicator"

E550 PACIFIC SPARE PARTS

POPULAR

MEDIUM

RARE

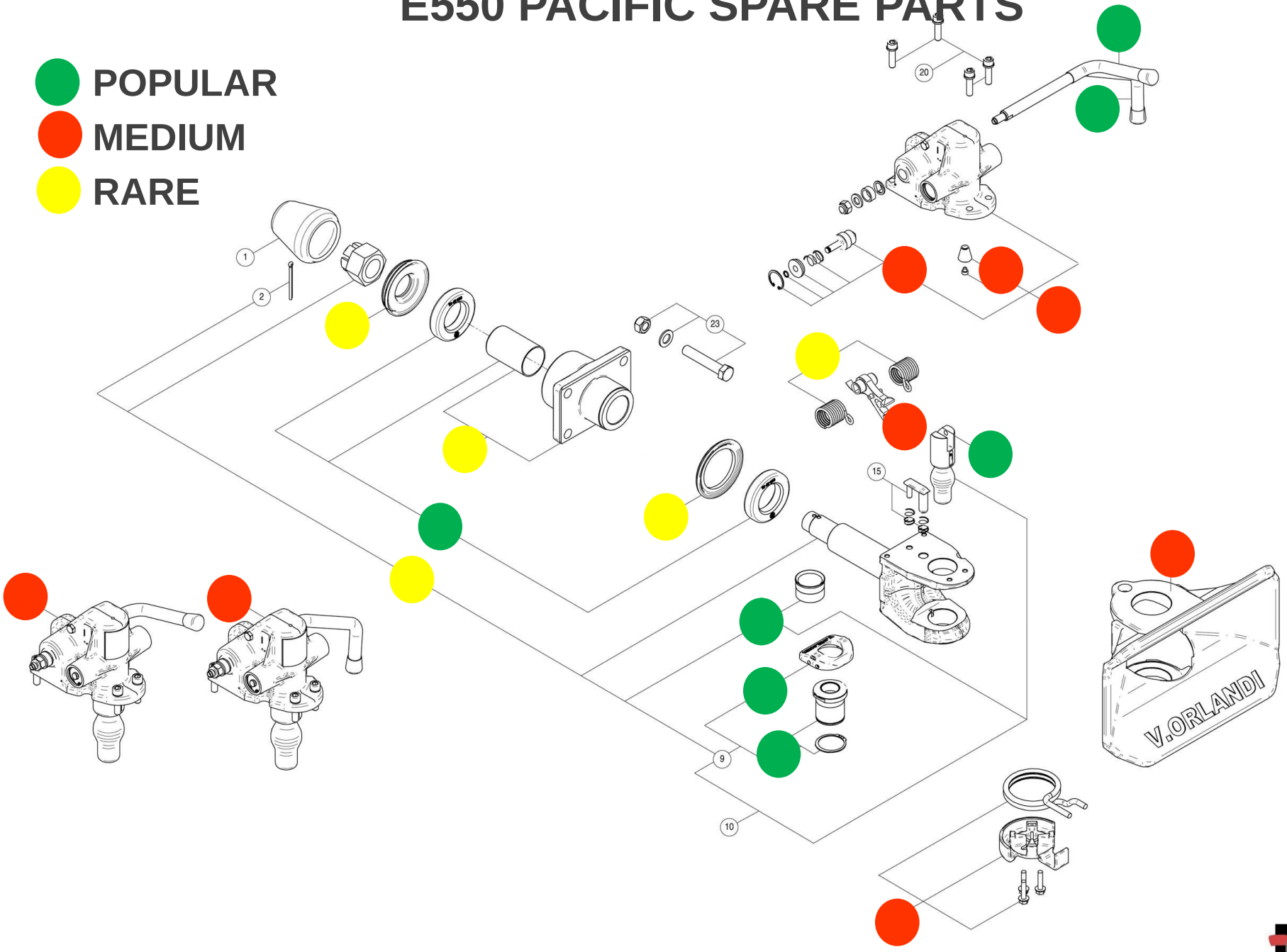

AUSTRALIAN KEY PRODUCT

MANUFACTURING TOWING SYSTEMS SINCE 1859

EH 524 PACIFIC

- 50mm Automatic drawbar coupling
- D-Value: 220 kN
- Weight: 52 Kg
- 47° upwards degrees
- Designed for Australian conditions
- Two automatic safety devices
- Easy to maintain (3D tutorial available)
- CRN

SPECIAL COUPLING FOR TIPPING OVER AXLE TRAILERS:

The oscillating drawbar coupling EH524 allows you to improve the tipping operations without disconnecting your trailer anymore: you can save your time while tipping.

V.Orlandi has studied and developed this solution specifically for the Australian TOAT's operators.

EH524/EH50 SPARE PARTS

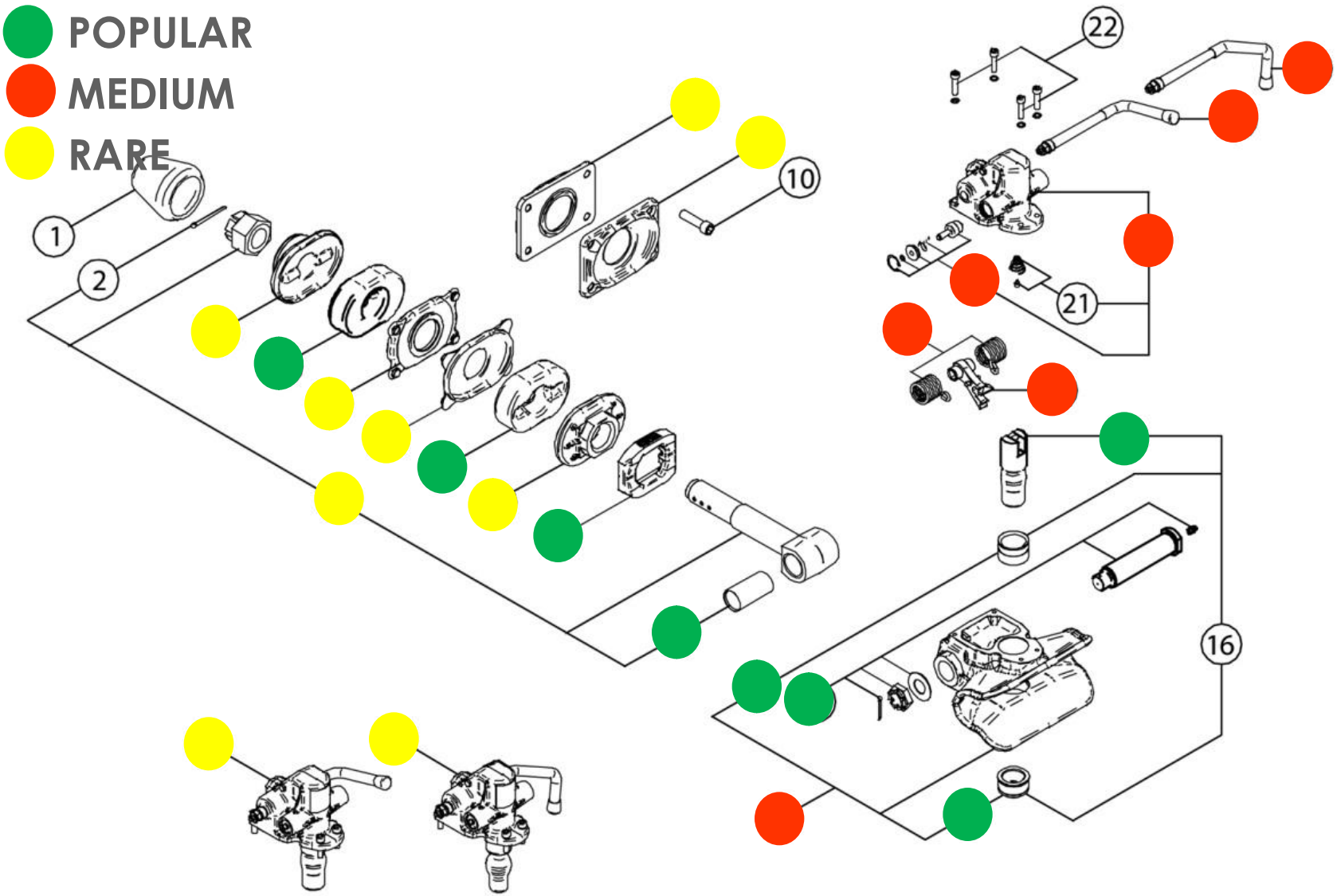

AUSTRALIAN KEY PRODUCT

MANUFACTURING TOWING SYSTEMS SINCE 1859

UN 90

- 76mm NATO pintle hook
- D-Value: 190 kN
- Weight: 46 Kg
- dbar articulation: 60° upwards/downwards
- Addressed to Military operators
- Easy to maintain (3D tutorial available)
- CRN approved

DUAL USE COUPLING:

You could use this dual use pintle hook for Heavy Duty enviroments. This product has been used and tested from the major army fleets in the world.

This product is ECE R55.01 approved (NATO standard).

UN90 SPARE PARTS

POPULAR

MEDIUM

RARE

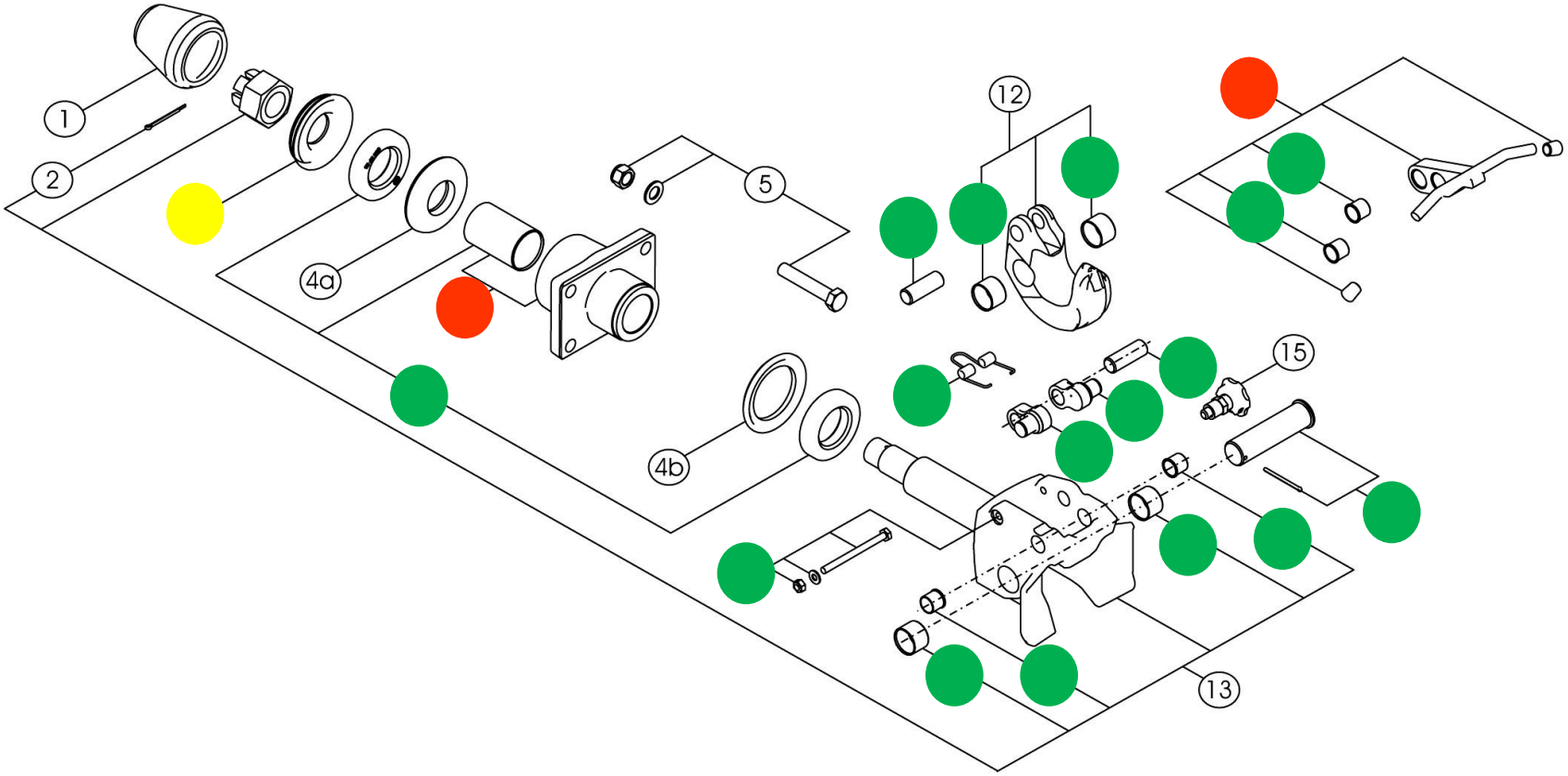

AUSTRALIAN KEY PRODUCT

MANUFACTURING TOWING SYSTEMS SINCE 1859

E 57 PACIFIC

- 57mm Automatic drawbar coupling
- D-Value: 300 kN
- S-Value: 3.000 Kg
- Weight: 60 Kg
- Designed for Australian conditions
- Two automatic safety devices
- Easy maintaince (3D Service tutorial available)
- CRN approved

EXTRA SAFETY: wide range of devices to improve the operator safety (Retrofit Kits)

OPEN/CLOSE REMOTE LIGHTS

PNEUMATIC CO02000

PNEUMATIC CO01400

E57 SPARE PARTS

POPULAR
MEDIUM
RARE

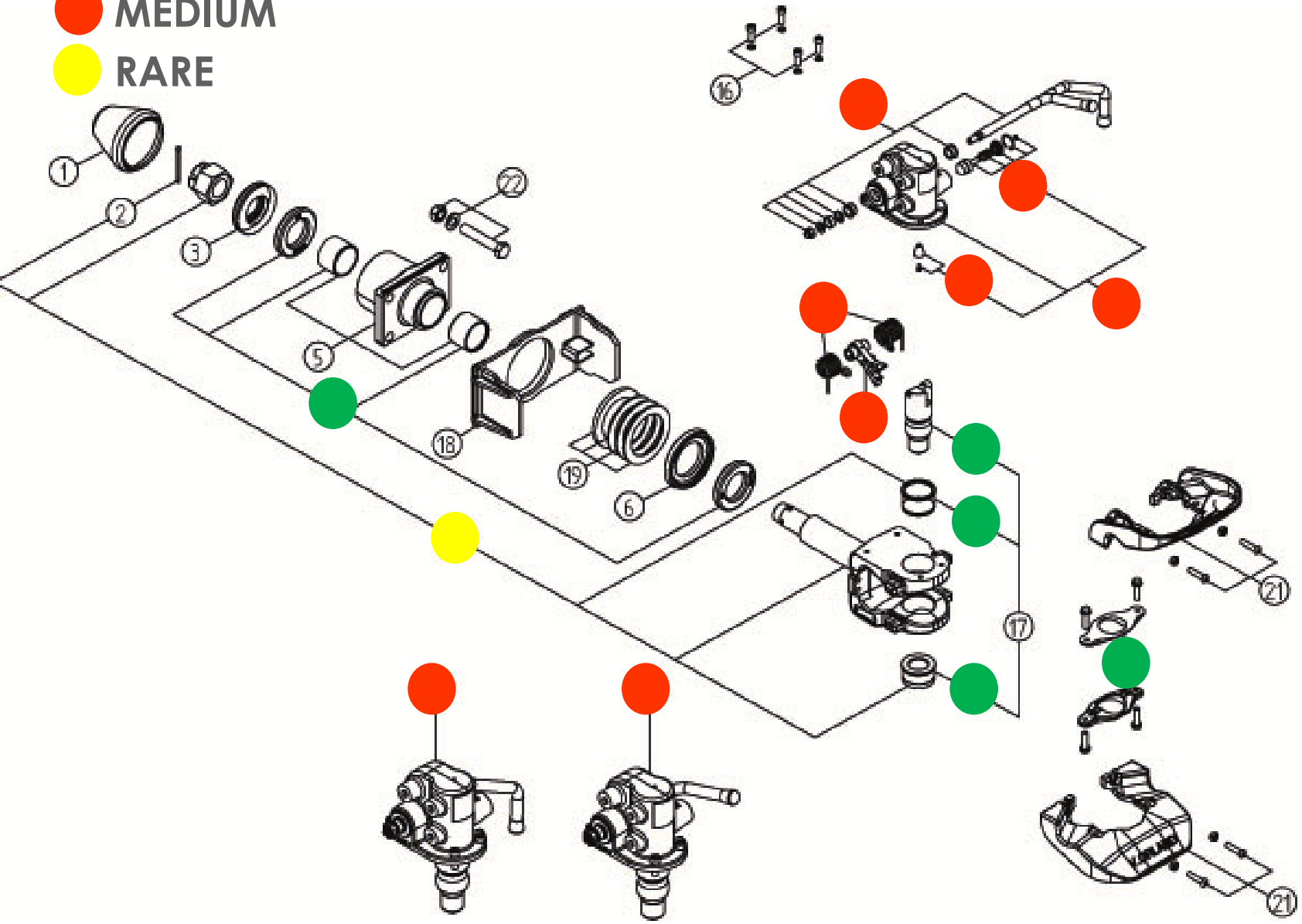

AUSTRALIAN KEY PRODUCT

MANUFACTURING TOWING SYSTEMS SINCE 1859

HERCULES PACIFIC

- 50mm or 70mm manual coupling
- Towing capacity: 250 ton or 500 ton
- Weight: 65 Kg or 100 Kg
- Designed for Australian conditions
- Addressed to mining operators
- Easy to maintain (3D tutorial available)
- CRN

SPACIAL HD MINING COUPLING:

You could use this HD coupling to tow your Boing 747 around the yard.

This product is CRN approved and respect all the V.ORLANDI hight quality standards.

HERCULES SPARE PARTS

POPULAR

MEDIUM

RARE

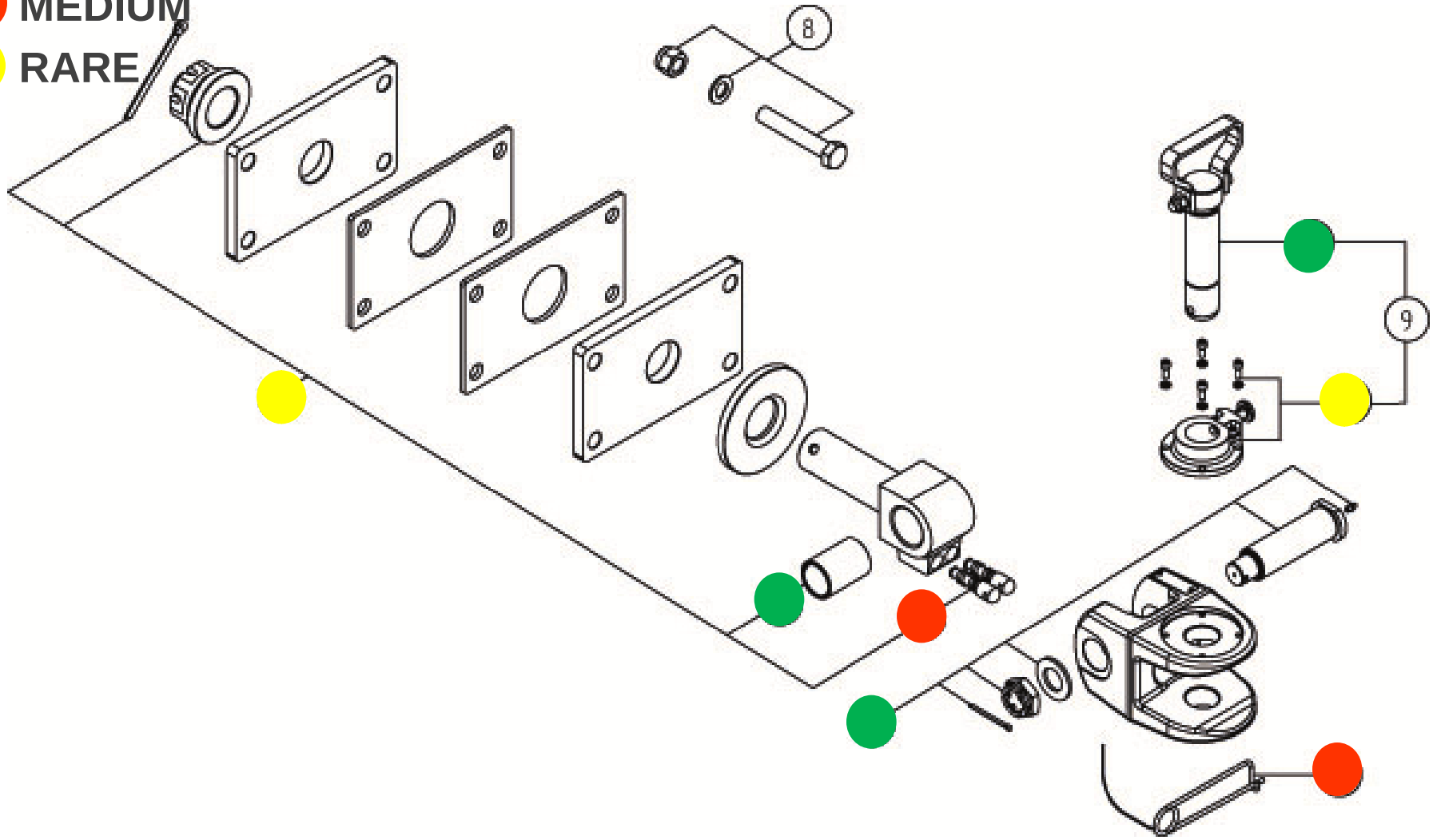

LIGHT DUTY COUPLING RANGE

MANUFACTURING TOWING SYSTEMS SINCE 1859

ULPYO

Manual Hook Coupling

UN 45

Manual Hook Coupling

GM 10

Towing Coupling

DE 702-704

Mixed Ball hitch / Hook

DE 710-711

Mixed Ball hitch / Hook

DEDALO

Ball hitch coupling

DRAWBAR EYES RANGE

MANUFACTURING TOWING SYSTEMS SINCE 1859

40mm

Weldable, Flanged, Removable

50mm

Weldable, Flanged, Removable

57mm

Weldable, Flanged

70mm

Weldable

76mm

Weldable, Removable

SPLIT OR SOLID BUSH?

Most of our drawbar eyes (50mm removable and weldable) can be ordered with the **split bush** or with **solid bush** to improve product longevity and performance.

All our drawbar eyes are CRN or ECE R55.01 approved.

OUR COMPETITORS

MANUFACTURING TOWING SYSTEMS SINCE 1859

V.ORLANDI	JOST / Rockinger	VBG / Ringfeder
E 40	RO*40	4040/G150
E 550	RO*50	5050 / 5055 / 2050 96AUS / 101 AUS / 202 AUS
E 57	RO*57	VBG 795

THE 40mm

MANUFACTURING TOWING SYSTEMS SINCE 1859

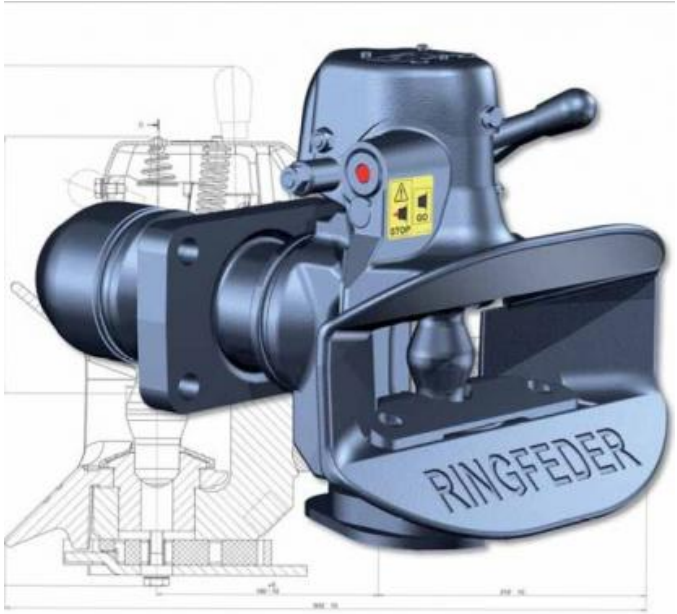

Ringfeder 4040

- Hole pattern 160x100
- D-Value 137 kN
- Dc-Value 92 kN
- S-Load 1.000 Kg
- Weight 39 Kg

V.ORLANDI E40

- Hole pattern 160x100
- D-Value 150 kN
- Dc-Value 100 kN
- S-Load 1.000 Kg
- Weight 37,5 Kg

THE 50mm

MANUFACTURING TOWING SYSTEMS SINCE 1859

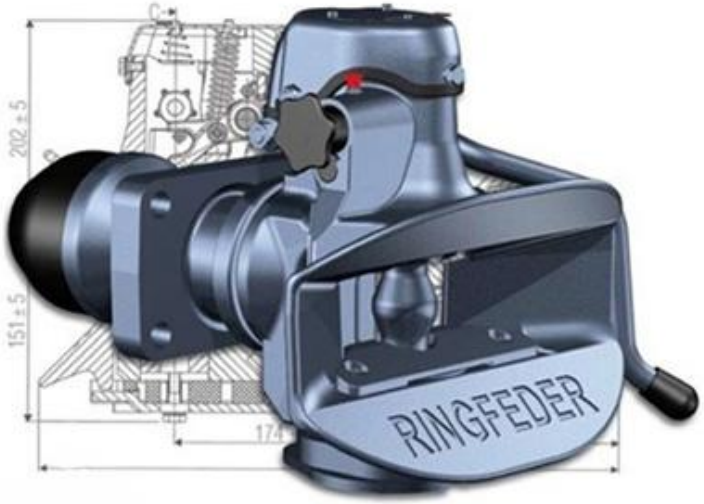

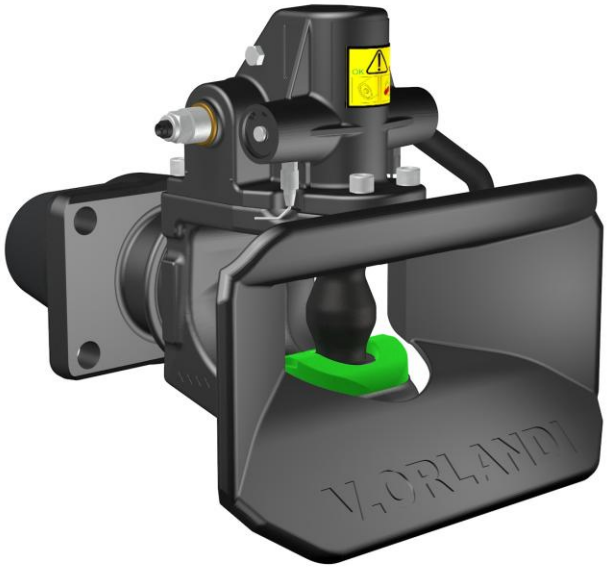

RINGFEDER 303 AUS

- Hole pattern 160x100
- D-Value 320 kN
- Dc-Value 135 kN
- S-Load 1.000 Kg
- Weight 50 Kg

V.ORLANDI E550 PACIFIC

- Hole pattern 160x100
- D-Value 330 kN
- Dc-Value 145 kN
- S-Load 2.500 Kg
- Weight 42 Kg

50mm Ringfeder 303 AUS

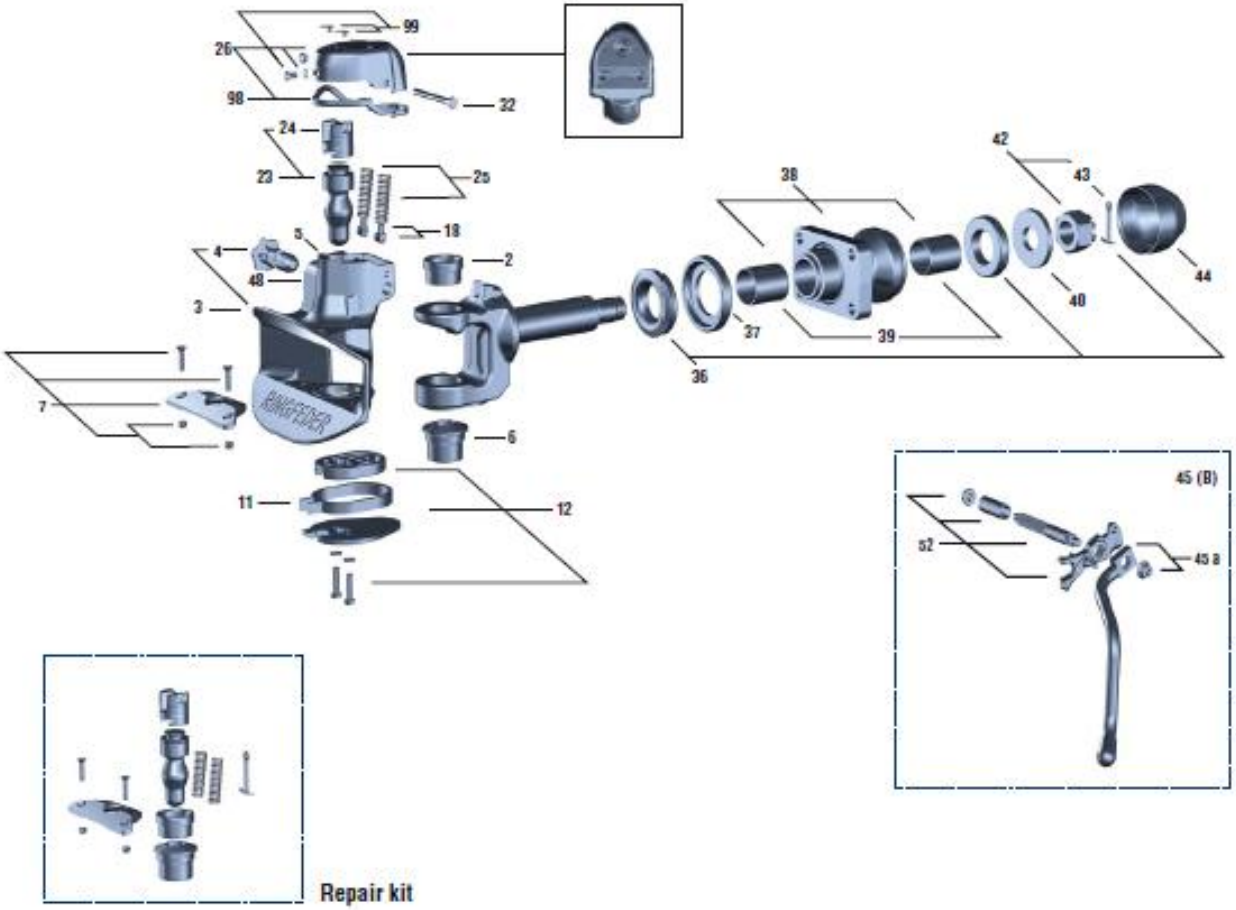

50mm V.ORLANDI E 550 PACIFIC

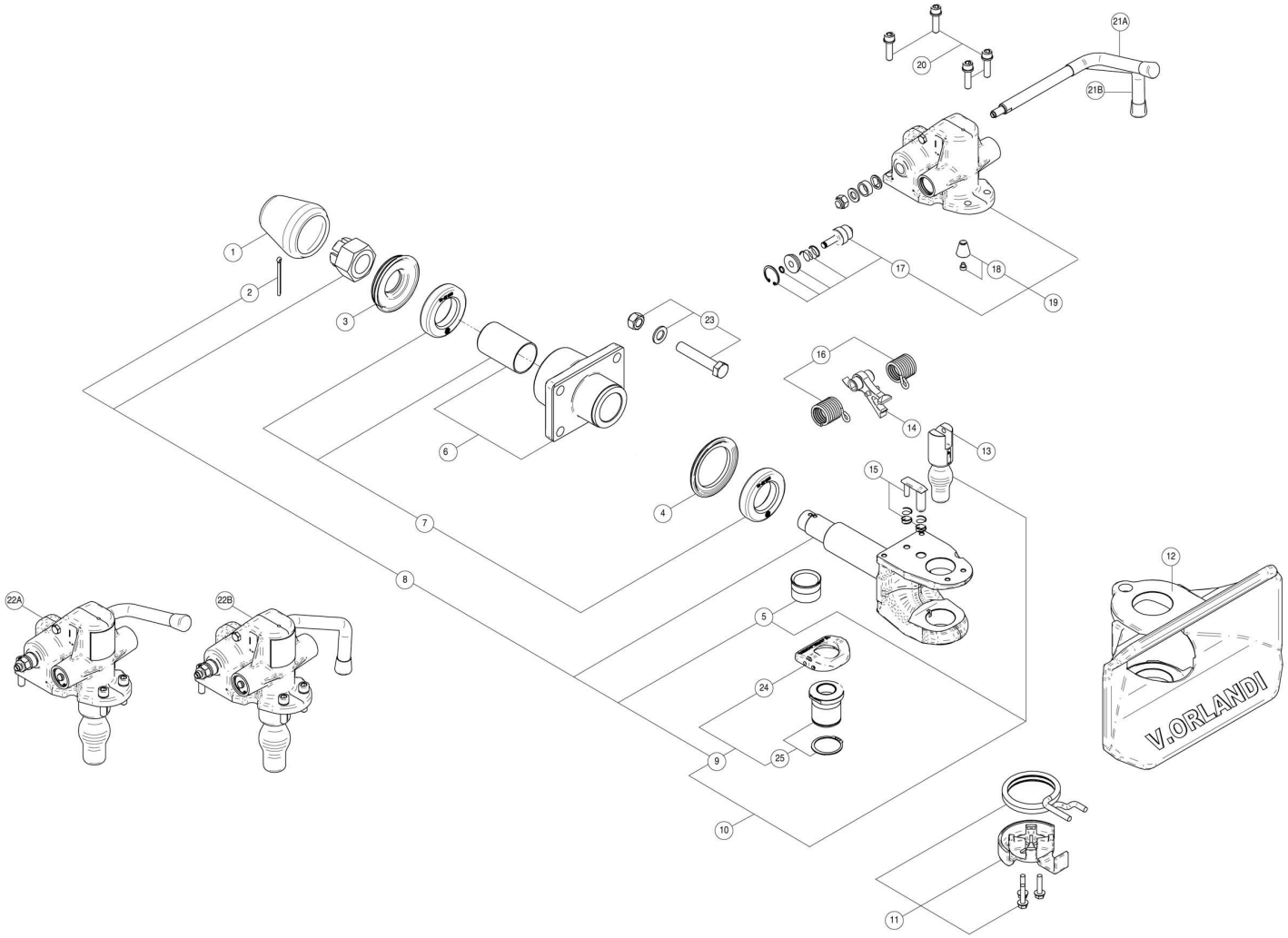

E550 PACIFIC

SERVICE, MAINTENANCE & PRODUCTIVITY

- Service on main COUPLING PIN in only 4 minutes
- Service on WEAR PAD in only 8 minutes
- Service on KIT - Pin, U/L bushes & Wear Pad - in only 55 minutes
- Did you smash the BELL MOUTH? YOU DO NOT need to replace the whole coupling, but replace the jaw in only 13 minutes.
- The E550 PACIFIC can be uncoupled in any angle reducing productivity loss to the fleet

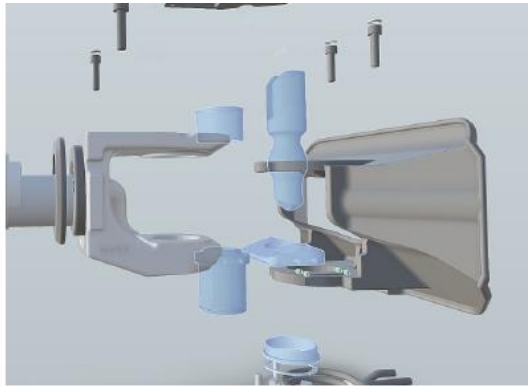

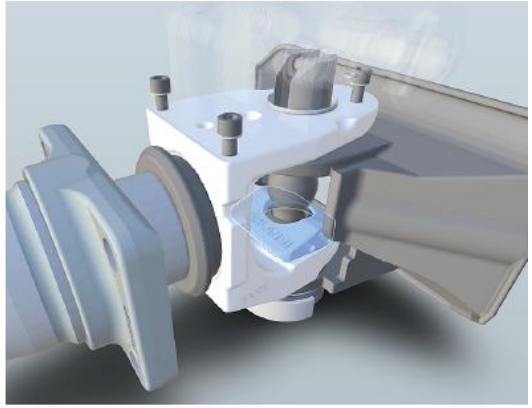

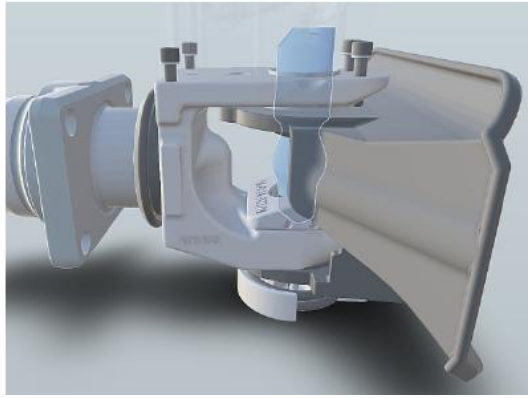

DID YOU KNOW THAT?

If you start to calculate the annual time saved on maintenance, on downtime, on productivity loss, on cost of the spare parts...

THE E550 PACIFIC GUARANTEE YOU A GREAT COST SAVING ACROSS YOUR FLEET FOR A TOP PREMIUM PRODUCT

E550 PACIFIC

SERVICE COMPARISON - COST ANALYSIS

Cost Analysis on 1 COUPLING- Hourly Labour Cost considered: $95

V.ORLANDI

KIT REBUILD COUPLING

- Service Time 55 Min
- Labour Cost $87

COUPLING PIN

- Service Time 4 Min
- Labour Cost $6

UPPER & LOWER BUSH

- Service Time 40 Min
- Labour Cost $64

PLASTIC WEAR PAD

- Service Time 8 Min
- Labour Cost $13

KIT COUPLING BELL MOUTH

- Service Time 13 Min
- Labour Cost $21

COMPETITION

KIT REBUILD COUPLING

- Service Time 120 Min
- Labour Cost $190

COUPLING PIN

- Service Time 45 Min
- Labour Cost $72

UPPER & LOWER BUSH

- Service Time 120 Min
- Labour Cost $190

PLASTIC WEAR PAD

- Service Time 15 Min
- Labour Cost $40

*KIT COUPLING BELL MOUTH

- Service Time 120 Min
- Labour Cost $190

FLEET SAVING

KIT REBUILD COUPLING

- 54% Service time
- 118% on Labour Cost

COUPLING PIN

- 91% Service time
- 1025% on Labour Cost

UPPER & LOWER BUSH

- 67% Service time
- 200% on Labour Cost

PLASTIC WEAR PAD

- 47% Service time
- 88% Labour Cost

*KIT COUPLING BELL MOUTH

- 89% Service time
- 823% Labour Cost

** If you do not replace the whole coupling*

E550 PACIFIC

YEARLY COST SAVING FOR A FLEET HAVING 100 COUPLINGS

V.ORLANDI
TOWING SYSTEMS

DID YOU KNOW THAT?

ANNUAL AVG COST SAVING

$100K

AVG SAVING ON TIME MAINTENANCE

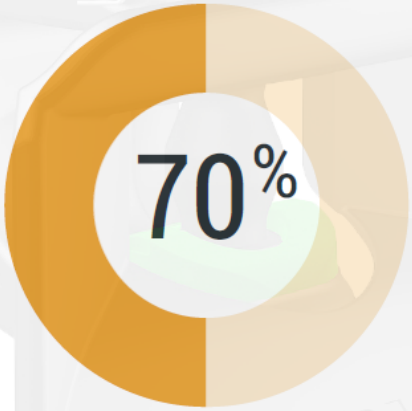

AVG SAVING LABOUR COST

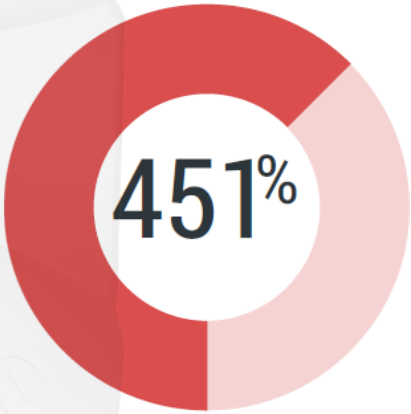

\+ IMPROVING FLEET'S PRODUCTIVITY AND PROFITABILITY REDUCING DOWNTIME COST

PRODUCT RANGE

MANUFACTURING TOWING SYSTEMS SINCE 1859

FIFTH WHEELS

How to identify a fifth wheel. What do I need to know?

1. Kingpin diameter
2. Fixing
3. Top plate
4. Height
5. Articulation

THE KING PIN DIAMETER

MANUFACTURING TOWING SYSTEMS SINCE 1859

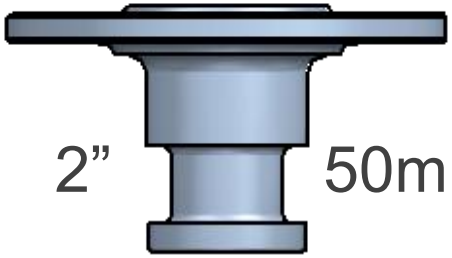

F2

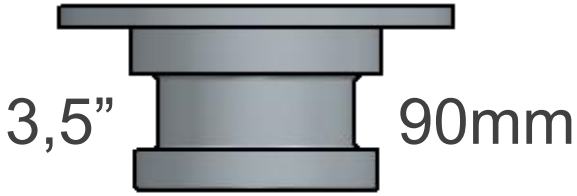

F3

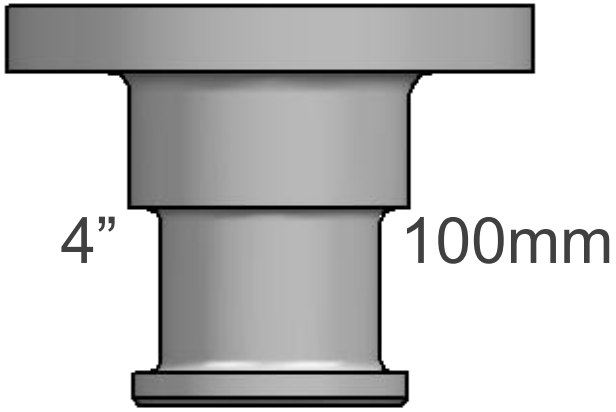

F4

THE FIXING

MANUFACTURING TOWING SYSTEMS SINCE 1859

ISO standard

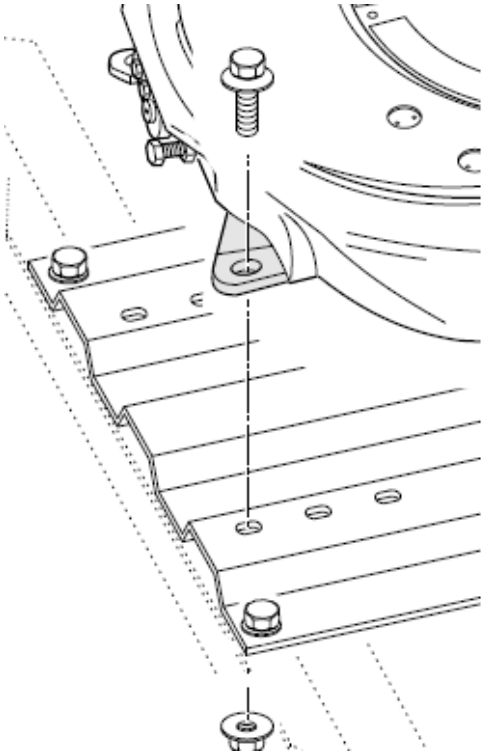

Weld-on feet

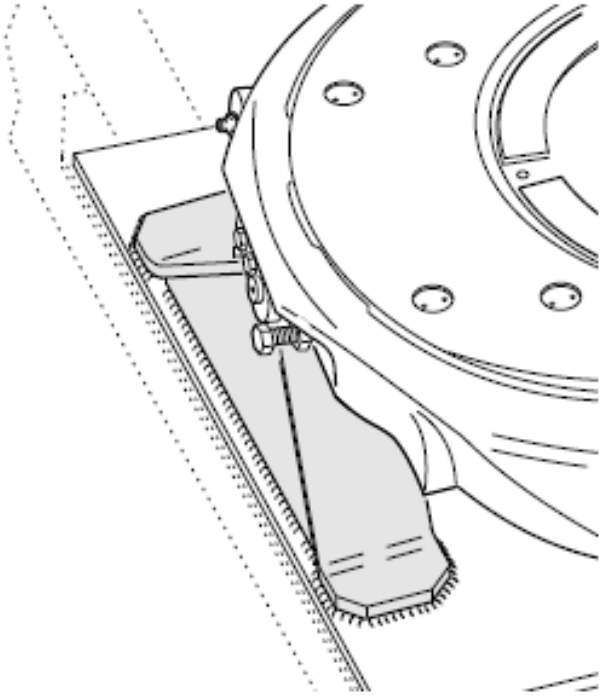

THE TOP PLATE

MANUFACTURING TOWING SYSTEMS SINCE 1859

Casted

Fabricated

B

G

THE HEIGHT

MANUFACTURING TOWING SYSTEMS SINCE 1859

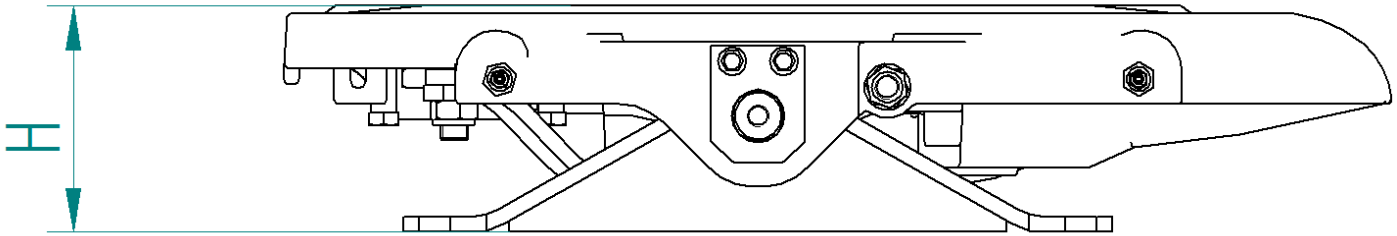

H= 150, 185, 225, 250 mm

THE ARTICULATION

MANUFACTURING TOWING SYSTEMS SINCE 1859

Standard, 3°

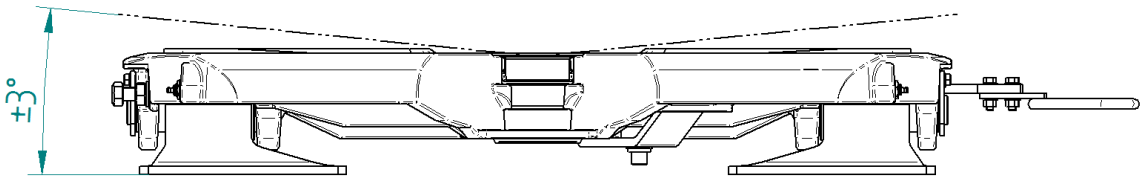

“K” type, 5°

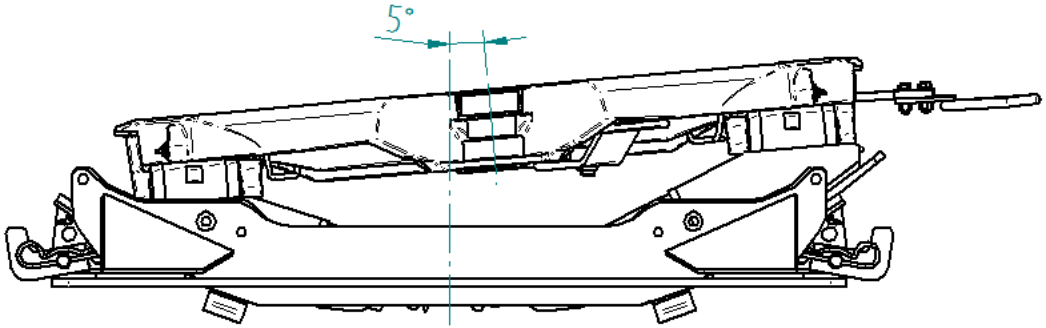

“C” type, 12°

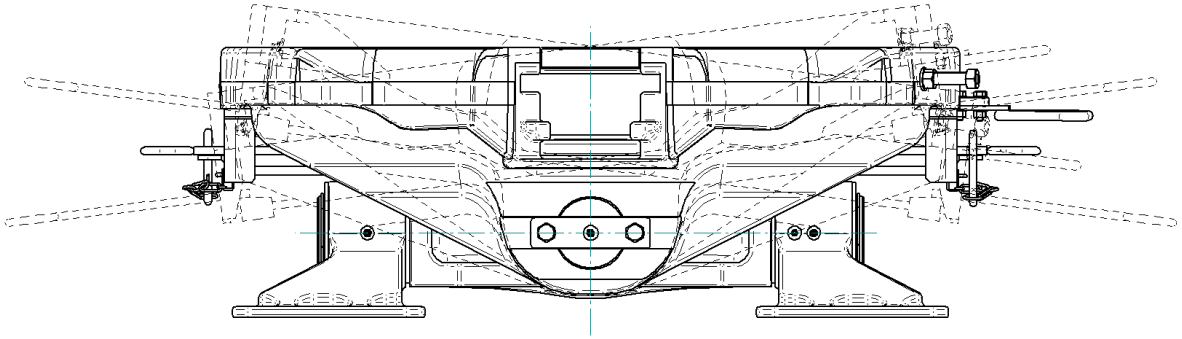

FIFTH WHEELS RANGE

MANUFACTURING TOWING SYSTEMS SINCE 1859

RP10-P

2” CAST ON PIVOT
Application: General Freigth

RP50-T

2” CAST ON RUBBER
Application: General Freigth

RV10-T

2” CAST ON RUBBER
Application: General Freigth

RP50-TF FRONT RELEASE

2” CAST ON RUBBER
Application: Roll-Back Trailers

RSS / RSD

Single and Double ball-races
Range: from 10 to 30 tons

RP90-T

3,5” CAST ON RUBBER
Application: Livestock trailers

RP95-DO

3,5” DOUBLE OSCILLATING
Application: Mining

FPX

2” LIFTING FIFTH WHEEL
Application: Ports Logistics

FDH

2” DOUBLE HEIGHTS
Application: General freigth

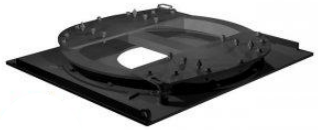

BRA-S/D

BALL RACE ASSY
Application: Livestock Trailers

OUR COMPETITORS

MANUFACTURING TOWING SYSTEMS SINCE 1859

V.ORLANDI	JOST	SAF Holland / +GF+
RP10-P/S	JSK37E	FW3510 / SK3620
RP50-T	JSK42	FW37 / SK3620
RP50-TF	JSK37027	-
RV10-T	JSK37CZ	- / G36
RP90-T	JSK38-C1	FW70 / SK-HD 38.36
RP90-DO	JSK38-G	FW2080 / G38G

AUSTRALIAN KEY PRODUCT

MANUFACTURING TOWING SYSTEMS SINCE 1859

RV10 - T

- 2’’ cast fifth wheel on rubber buffers
- D-Value: 200 kN
- Imposed load on tractor: 22 ton.
- Weight: 147 – 164 Kg
- H: 150mm, 185mm, 250mm
- ISO fitting
- CRN
- Three Mechanical safety devices

Additional components available for the RV10-T:

MOUNTING PLATES

BALL-RACE ASSY

SLIDERS

2’’ KINGPIN

AUSTRALIAN KEY PRODUCT

MANUFACTURING TOWING SYSTEMS SINCE 1859

RP50 - T

- 2’’ cast fifth wheel on rubber buffers
- Available with standard or low lube top
- D-Value: 200 kN
- Imposed load on tractor: 22 ton.
- Weight: 149 – 152 Kg
- H: 150mm, 185mm, 250mm
- ISO fitting
- CRN

Additional components available for the RP10-T:

MOUNTING PLATES

BALL-RACE ASSY

SLIDERS

2’’ KINGPIN

RP50-T SPARE PARTS

POPULAR

MEDIUM

RARE

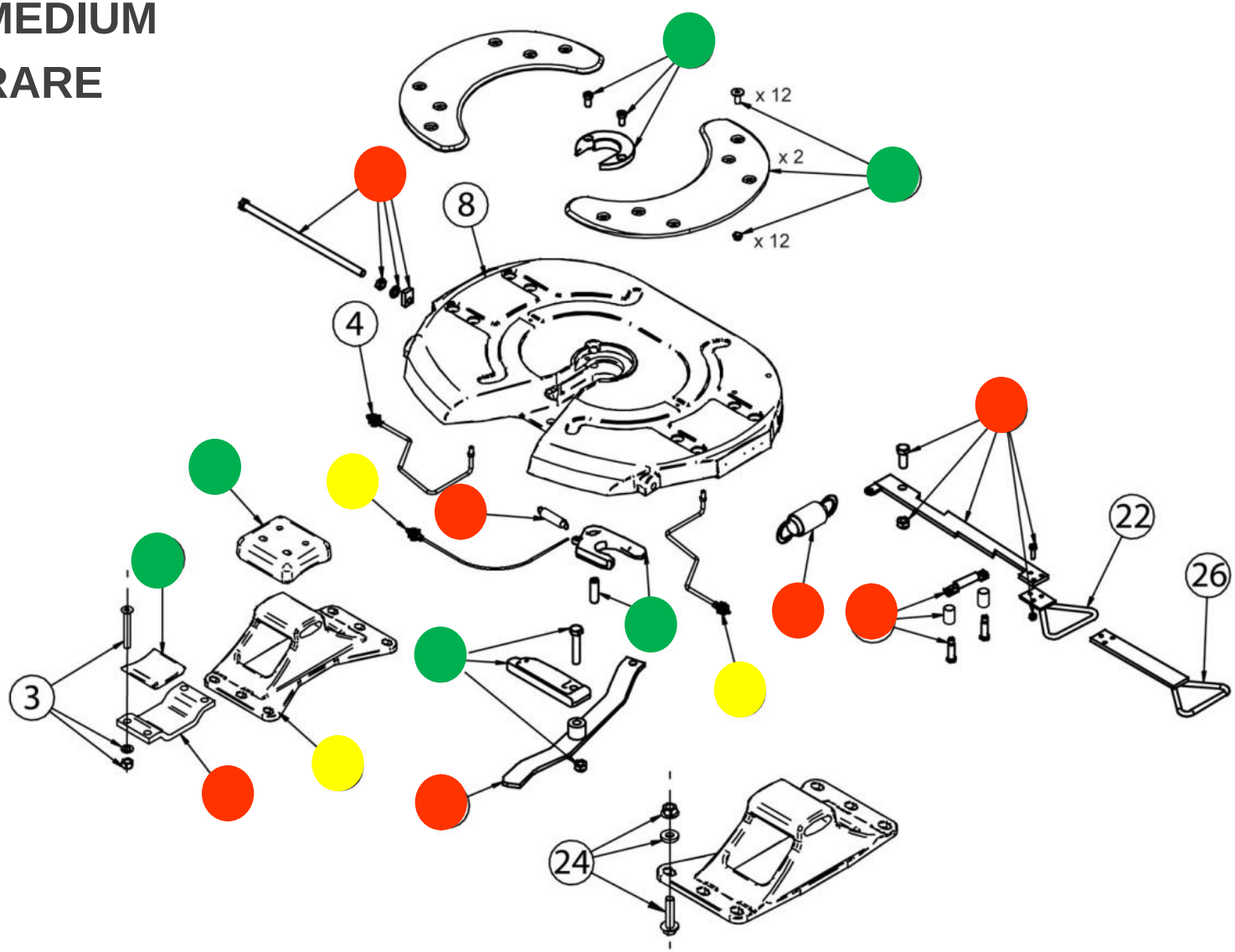

AUSTRALIAN KEY PRODUCT

MANUFACTURING TOWING SYSTEMS SINCE 1859

RP10 - P

- 2’’ cast fifth wheel on pivot bearings
- Available with standard or low lube top
- D-Value: 200 kN
- Imposed load on tractor: 20 ton.
- H: 140mm, 150mm, 185mm, 225mm, 250mm
- ISO fitting
- CRN
- Two Mechanical safety devices

Additional components available for the RP10-P:

MOUNTING PLATES

BALL-RACE ASSY

SLIDERS

2’’ KINGPIN

RP10-P SPARE PARTS

POPULAR
MEDIUM
RARE

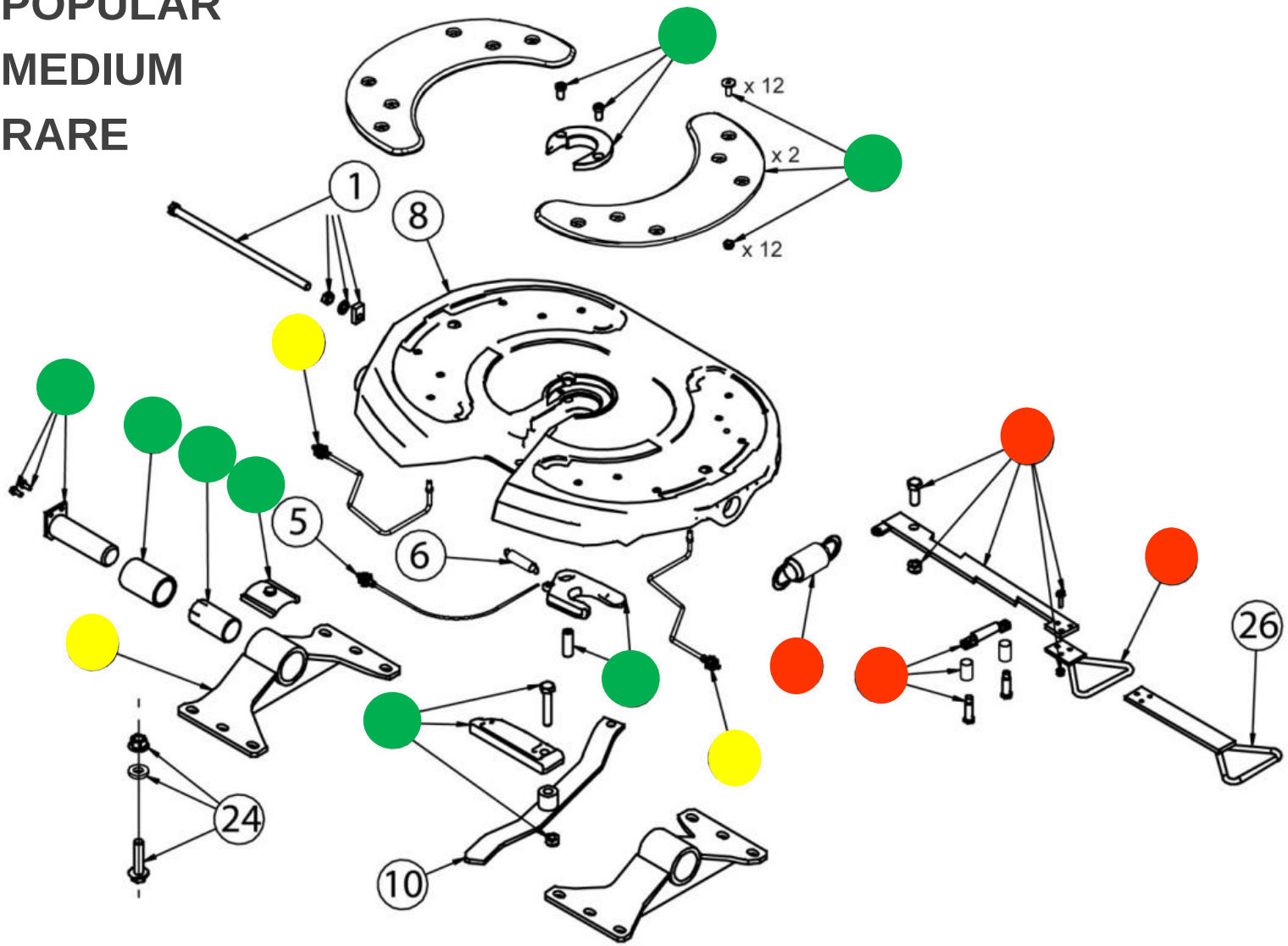

AUSTRALIAN KEY PRODUCT

MANUFACTURING TOWING SYSTEMS SINCE 1859

RP90 - T

- 3,5’’ / 2’’ cast fifth wheel on rubber buffers
- D-Value: 260 kN
- U-Value: 40 ton.
- Weight: 200 – 215 Kg
- H: 190mm, 250mm
- ISO fitting
- ECE R55.01 (Dotars approved)
- Can be converted into 2’’ fifth wheel **(RP59-T)**

Additional components available for the RP90-T:

MOUNTING PLATES

BALL-RACE ASSY

SLIDERS

2’’ or 3,5’’ KINGPIN

RP90-T SPARE PARTS

POPULAR
MEDIUM
RARE

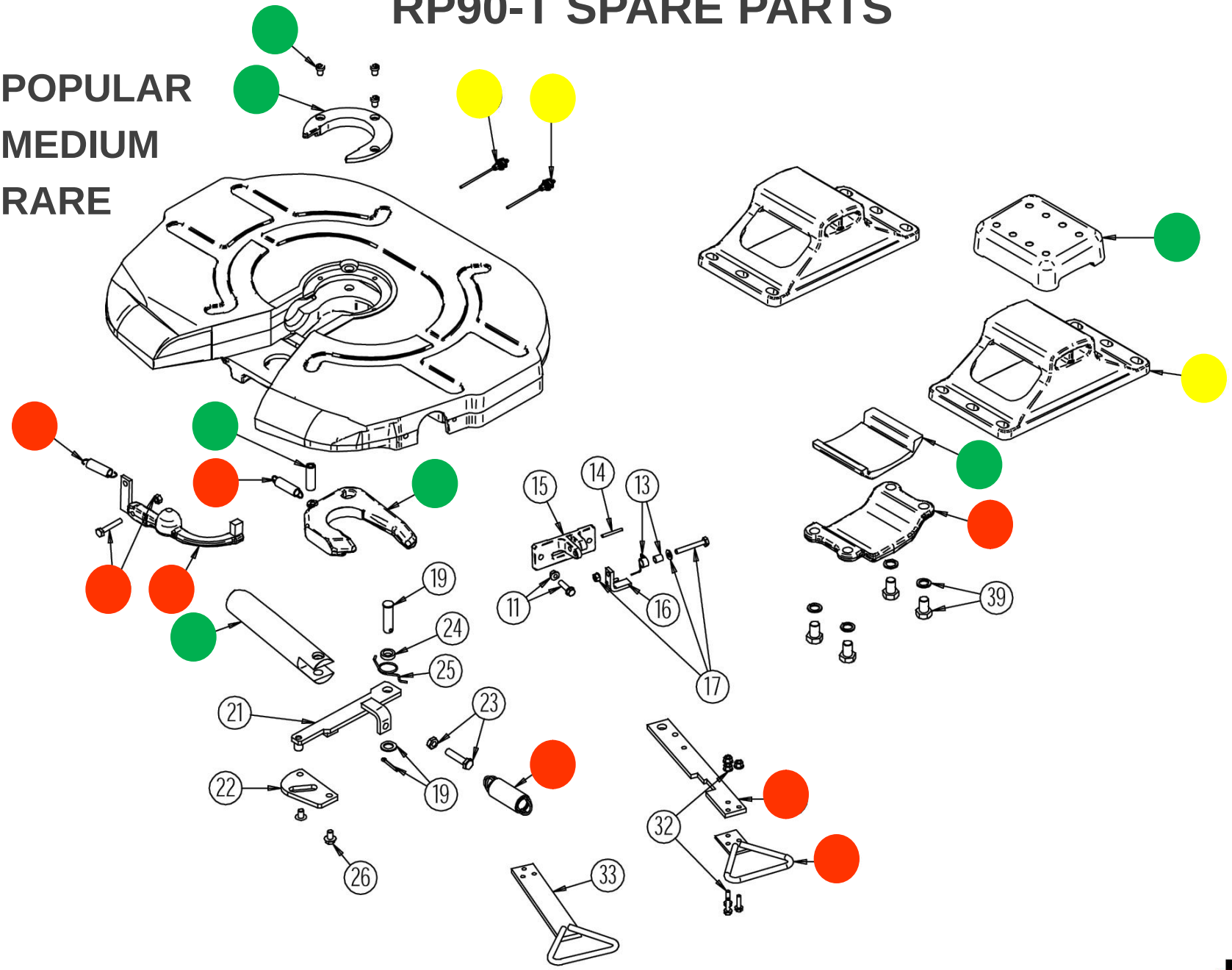

AUSTRALIAN KEY PRODUCT

MANUFACTURING TOWING SYSTEMS SINCE 1859

RP100 - DO

- 3,5’’ / 4’’ cast fifth wheel DOUBLE OSCILLATING
- D-Value: 260 kN
- U-Value: 40 ton.
- Weight: 362 Kg
- H: 350mm
- ISO fitting
- ECE R55.01 (Dotars approved)
- Can be converted into 4’’ fifth wheel **(RP95-DO)**

PECULIAR FIFTH WHEEL CONCEPT:

Ideal product to be used for the **mining environment** and harsh conditions.

AUSTRALIAN KEY PRODUCT

MANUFACTURING TOWING SYSTEMS SINCE 1859

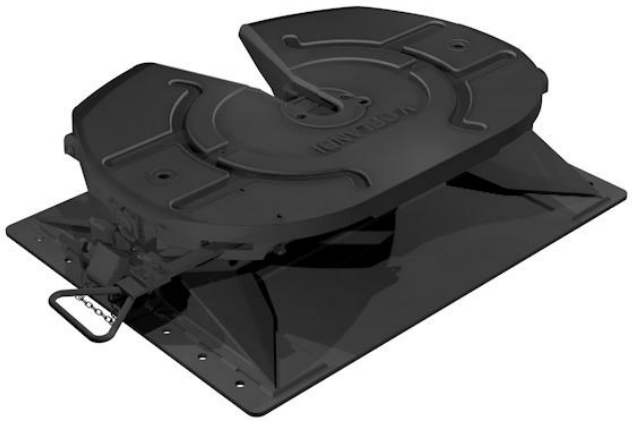

RP10 - K

- 2’’ cast fifth wheel COMPENSATED
- D-Value: 152 kN
- U-Value: 20 ton.
- Weight: 274 Kg
- H: 250mm
- Available with low lube top
- ECE R55.01 (Dotars approved)

PECULIAR FIFTH WHEEL CONCEPT:

Ideal product to be used for rigid bodyes such as: **TANKERS, DRY-BULK, BOTTOM DUMPS, GRAIN AND B-TRAINS** .

AUSTRALIAN KEY PRODUCT

MANUFACTURING TOWING SYSTEMS SINCE 1859

FPX

- 2’’ cast LIFTING fifth wheel
- Private yard use only
- U-Value: 22 ton.
- Weight: 658 Kg
- H (min): 237mm
- H (max): 584mm

PECULIAR FIFTH WHEEL CONCEPT:

Ideal product to be used as: easy way to unload the semi-trailer (ex. Bulk Material), container loading in Harbour areas, railway areas and motor carriers.

AUSTRALIAN KEY PRODUCT

MANUFACTURING TOWING SYSTEMS SINCE 1859

FSL / FSH

- Fifth wheel sliders (525mm to 630mm)
- D-Value: up to 163 kN
- U-Value: 22 ton.
- Weight: up to 260 Kg

PECULIAR FIFTH WHEEL CONCEPT:

Ideal product to allow the operator to move forward the position of his fifth wheel.

V.ORLANDI AUSTRALIA PTY LTD

MANUFACTURING TOWING SYSTEMS SINCE 1859

MARKETING & COMMUNICATION

EDITORIAL and ADVERTISING - Prime Creative Media

#DID YOU KNOW THAT?
CAMPAIGN MREC

MONTHLY TRAILER MAGAZINE
ONE PAGER ADS

EDITORIAL ON TRAILER MAGAZINE
COMPANY UPDATES AND TESTIMONIALS

V.ORLANDI AUSTRALIA PTY LTD

MANUFACTURING TOWING SYSTEMS SINCE 1859

DIGITAL MARKETING AND SOCIAL MEDIA

FACEBOOK AND LINKEDIN UPDATES & DIRECT EMAIL TO FLEET CUSTOMERS

NEW WEBSITE (www.orlandi.com.au) AND 3D VIDEO MANUALS

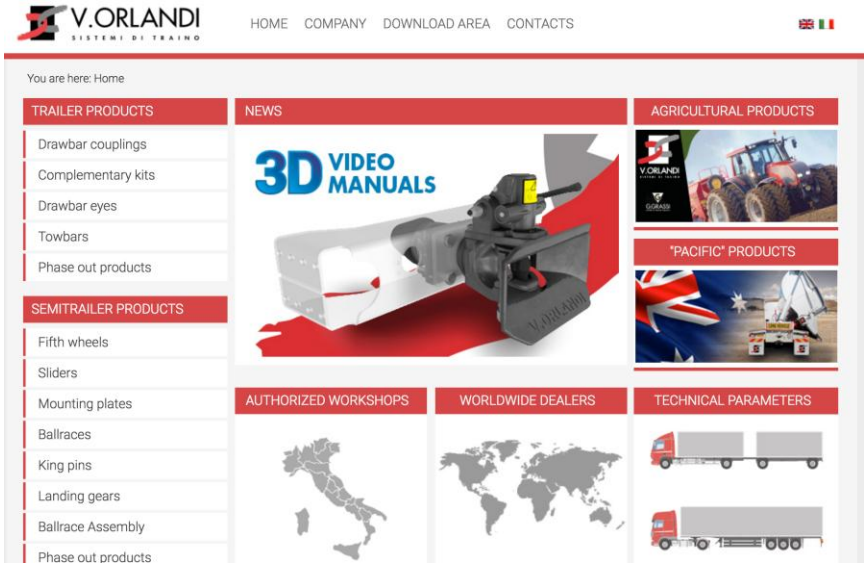

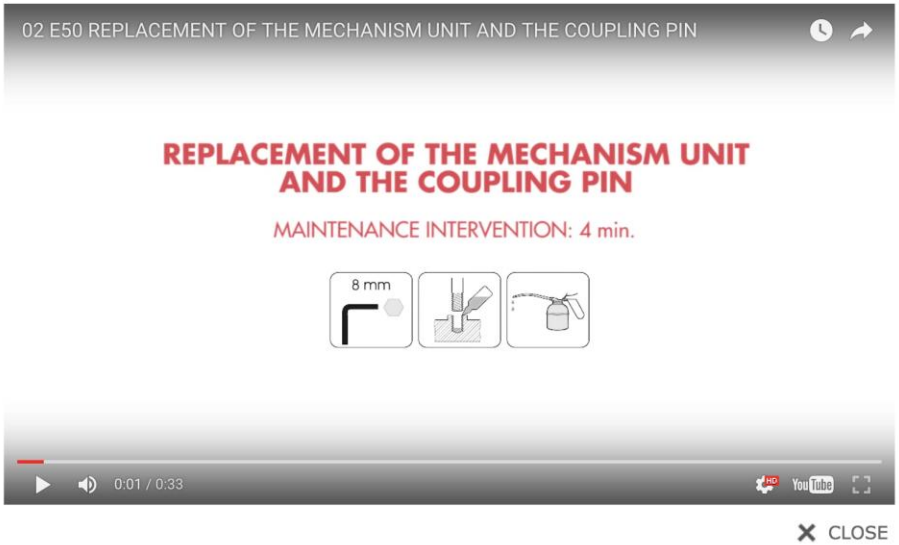

V.ORLANDI

TOWING SYSTEMS

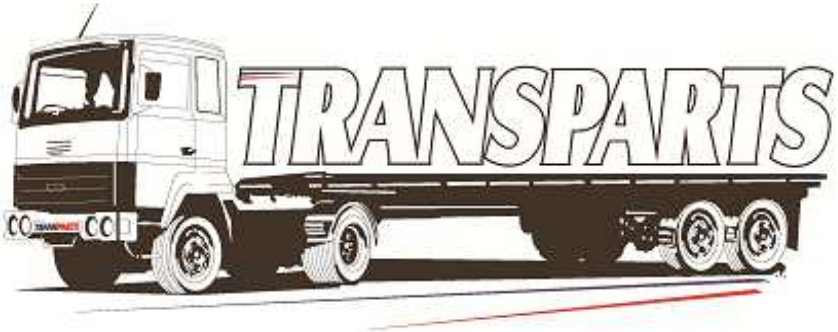

V.ORLANDI S.p.A.

Towing systems

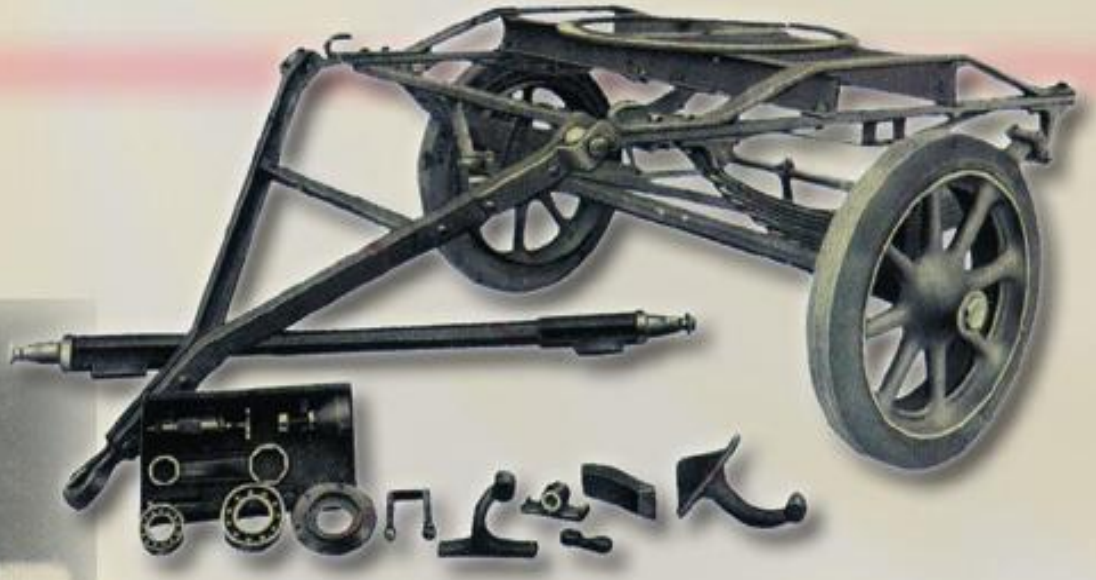

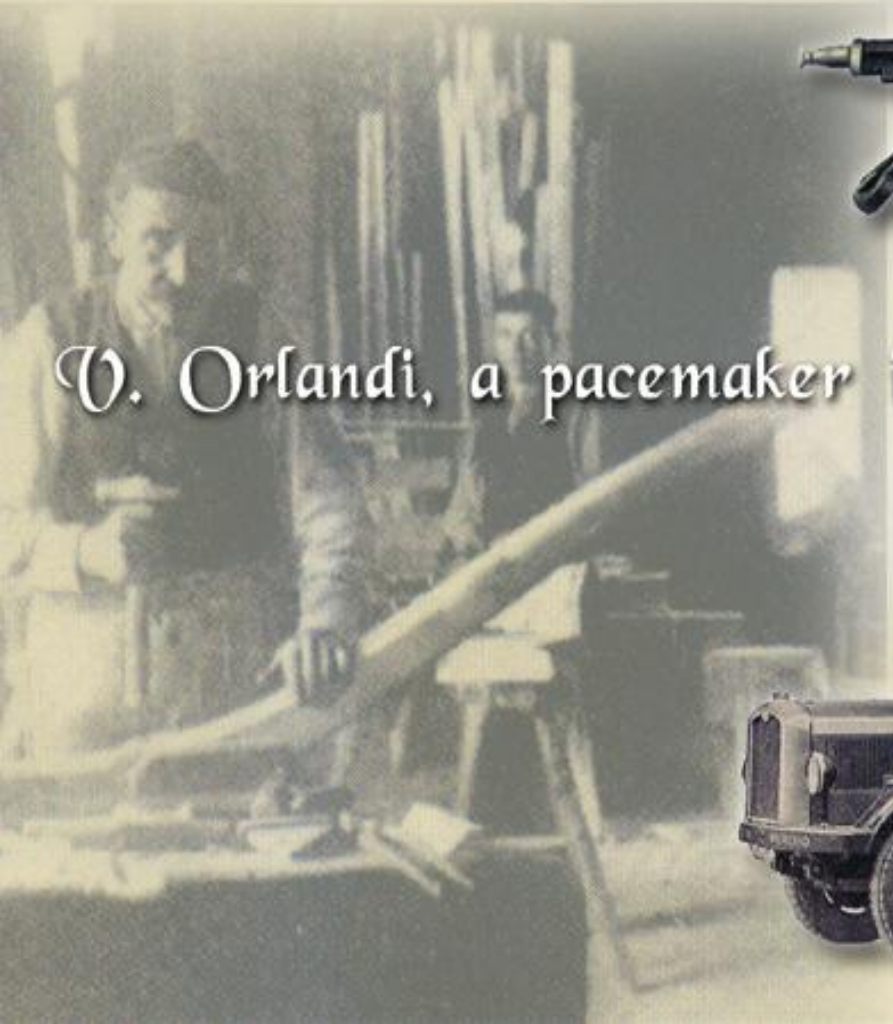

V. Orlandi, a pacemaker in transport history since 1859